Oxford Cambridge and RSA

Thursday 14 October 2021 – Morning

AS Level Physics A

H156/02 Depth in physics

Time allowed: 1 hour 30 minutes

You must have:
- the Data, Formulae and Relationships Booklet

You can use:
- a scientific or graphical calculator
- a ruler (cm/mm)

Please write clearly in black ink. **Do not write in the barcodes.**

Centre number | | | | | | Candidate number | | | | |

First name(s) _____

Last name _____

INSTRUCTIONS
- Use black ink. You can use an HB pencil, but only for graphs and diagrams.
- Write your answer to each question in the space provided. If you need extra space use the lined pages at the end of this booklet. The question numbers must be clearly shown.
- Answer **all** the questions.
- Where appropriate, your answer should be supported with working. Marks might be given for using a correct method, even if your answer is wrong.

INFORMATION
- The total mark for this paper is **70**.
- The marks for each question are shown in brackets **[ ]**.
- Quality of extended response will be assessed in questions marked with an asterisk (*****).
- This document has **20** pages.

ADVICE
- Read each question carefully before you start your answer.

© OCR 2021 [601/4742/8]
DC (ST/CT) 300869/4
OCR is an exempt Charity

Answer **all** the questions.

1 Two loudspeakers $\mathbf{S_1}$ and $\mathbf{S_2}$ are connected to a signal generator. The loudspeakers emit coherent sound waves.

(a) State what is meant by the term **coherent**.

.....

..... **[1]**

(b) A microphone is connected to an oscilloscope. The points **O**, **J**, **K** and **L** all lie on a straight line as shown. The microphone is moved from **O** to **L**.

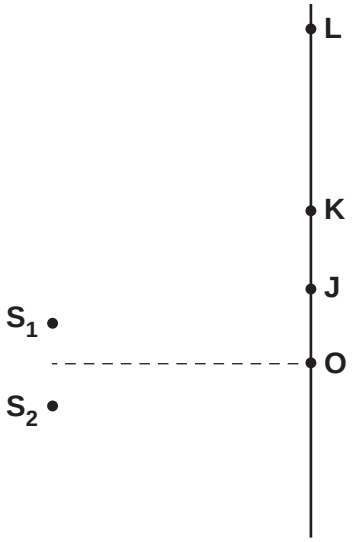

Not to scale

A series of maxima and minima is observed between **O** and **L**.
The microphone records a maximum at **O**. As it moves towards **L**, the first minimum is observed at **J** and the next maximum at **K**.
The distance between $\mathbf{S_1}$ and **J** is 2.00 m and the distance between $\mathbf{S_2}$ and **J** is 2.08 m.
The distance between $\mathbf{S_1}$ and **K** is 2.05 m and the distance between $\mathbf{S_2}$ and **K** is 2.21 m.

(i) Calculate the path difference at point **J** between the waves from $\mathbf{S_1}$ and $\mathbf{S_2}$.

path difference = ... m **[1]**

(ii) State the phase difference in radian at point **J** between the waves from $\mathbf{S_1}$ and $\mathbf{S_2}$.

phase difference = ... rad **[1]**

© OCR 2021

(iii) Show that the wavelength of the sound waves is 0.16 m.

[1]

(c) The frequency of the sound is determined using the oscilloscope.

(i) Explain how the oscilloscope is used to determine the frequency.

.....

.....

..... **[2]**

(ii) The frequency of the sound is 2.1 kHz.

Determine the speed *v* of sound.

v = ... $m\,s^{-1}$ **[2]**

© OCR 2021

2 **(a)** The force F against extension x graph below shows the loading and unloading of a piece of rubber.

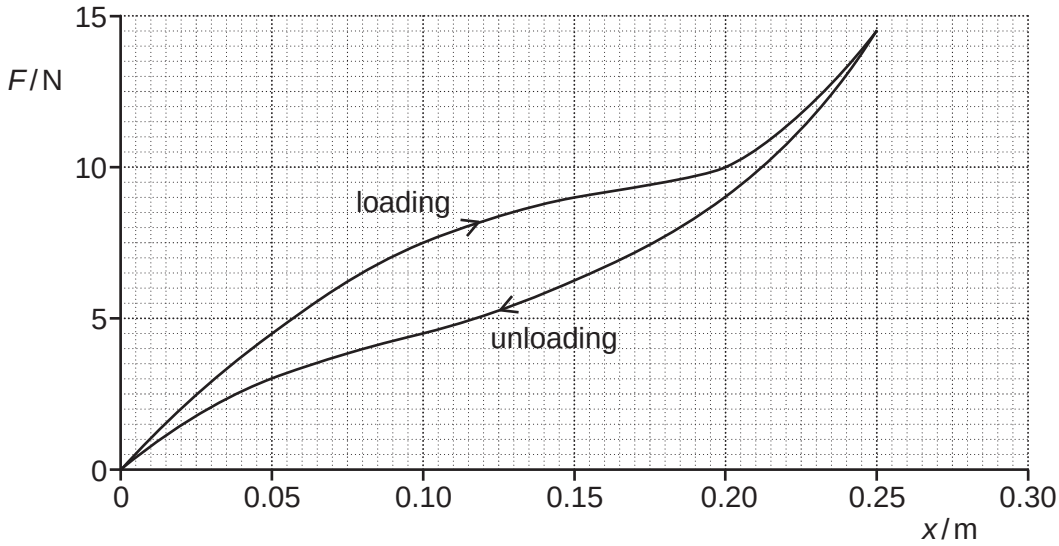

(i) State the physical quantity represented by the area under the loading curve.

..... **[1]**

(ii) Determine the energy E transferred when the rubber is stretched to an extension of 0.25 m.

E = ... J **[2]**

(iii) Suggest why the energy transferred by the rubber during unloading is different to your answer in **(ii)**.

.....

..... **[1]**

(b) A metal wire has length 2.2 m and cross-sectional area of $1.4 \times 10^{-7}\,m^2$. One end of the wire is fixed to the ceiling and a load of weight 49 N is attached to the other end so that the wire is vertical.
The Young modulus of the metal is 180 GPa.

The wire obeys Hooke's law.

© OCR 2021

Calculate

(i) the stress σ in the wire

σ = ... Pa **[2]**

(ii) the strain ε of the wire

ε = ... **[2]**

(iii) the extension x of the wire

x = ... m **[2]**

(iv) the elastic potential energy E of the wire.

E = ... J **[2]**

(c) The wire in **(b)** is replaced by a wire of the same metal and length but double the diameter. The same load is attached to the wire.

State and explain the change, if any, to the elastic potential energy of the wire.

.....

.....

..... **[2]**

© OCR 2021

3 **(a)*** A linear air track is used to investigate the collision of two gliders **A** and **B**, as shown in **Fig. 3.1**.

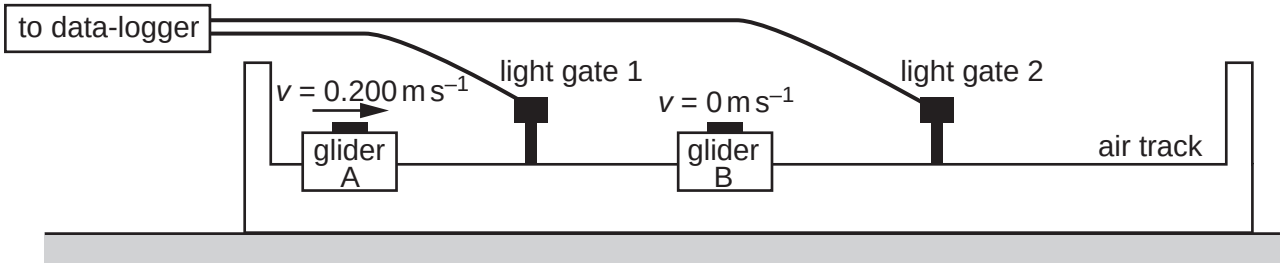

Fig. 3.1

Light gates 1 and 2 are connected to a data-logger to determine the speed of the gliders. Glider **A** has a mass of 0.75 kg and glider **B** has a mass of 1.25 kg.

Two experiments are carried out.

Experiment 1

- Glider **B** is initially at rest between light gates 1 and 2.
- Glider **A** passes light gate 1 at a speed of 0.200 m s^{-1}.
- Glider **A** collides with glider **B**.
- Glider **A** rebounds and passes light gate 1 at a speed of 0.050 m s^{-1} and glider **B** passes light gate 2 at a speed of 0.150 m s^{-1}.

Experiment 2

- Glider **B** is initially at rest between light gates 1 and 2.
- Glider **A** passes light gate 1 at a speed of 0.200 m s^{-1}.
- Glider **A** collides with glider **B**.
- Glider **A** **sticks** to glider **B**.
- Both gliders pass light gate 2 at a speed of 0.075 m s^{-1}.

With the help of calculations and the terms below, explain the results of the two experiments.

[6]

elastic **inelastic** **momentum**

.....

.....

.....

.....

.....

.....

.....

.....

.....

.....

© OCR 2021

.....

.....

.....

.....

.....

Additional answer space if required

.....

.....

.....

.....

.....

(b) A golf ball initially at rest is hit by a golf club. A data-logger records the variation of force *F* acting on the ball with time *t*, as shown in **Fig. 3.2**.

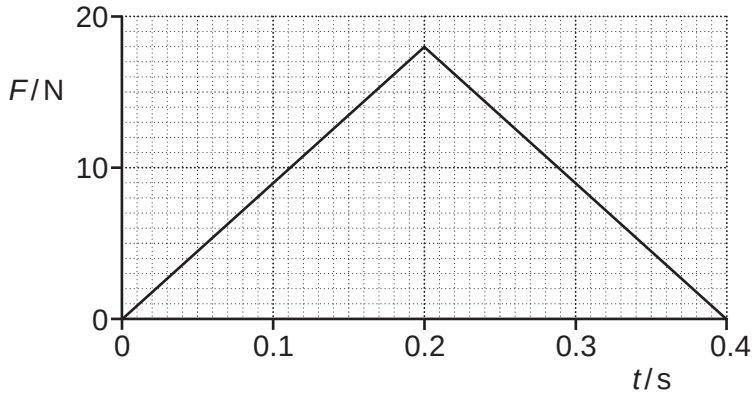

Fig. 3.2

The golf ball has a mass of 0.045 kg.

Calculate the speed *v* at which the ball leaves the club.

v = ... m s^{-1} **[3]**

© OCR 2021

4 **Fig. 4.1** shows a uniform wooden cylinder.

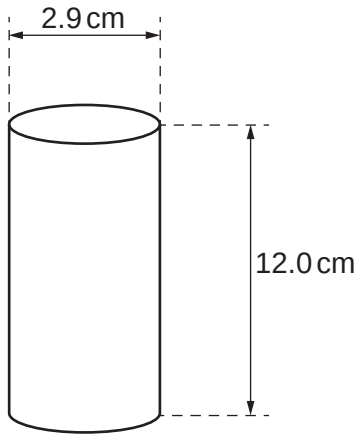

Fig. 4.1

The cylinder has height 12.0 cm and diameter 2.9 cm.
The density of the wood is 400 kg m^{-3}.

(a) **(i)** Show that the cross-sectional area of the wooden cylinder is about 6.6×10^{-4} m^2.

[1]

(ii) Calculate the weight *W* of the wooden cylinder.

W = ... N **[3]**

© OCR 2021

(b) A student places the wooden cylinder in a beaker of water so that it floats. The vertical distance between the water surface and the bottom of the cylinder is *y*, as shown in **Fig. 4.2**.

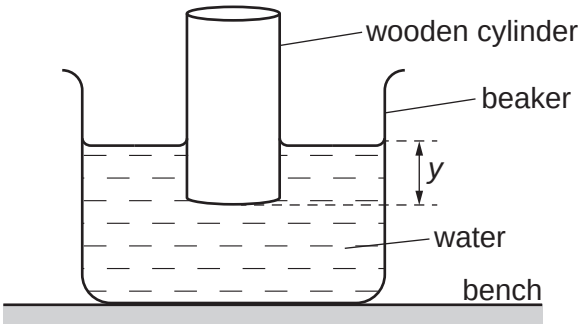

Fig. 4.2 (not to scale)

The density of water is 1000 kg m^{-3}.

Calculate the distance *y*.

y = ... m **[3]**

(c) The student repeats the experiment, but replaces the water with oil of density 900 kg m^{-3}. The cylinder will still float.

Calculate the new distance *y*. Explain your answer.

Calculation:

y = ... m

Explanation: .....

.....

.....

..... **[4]**

© OCR 2021

5 The circuit diagram shows a battery of e.m.f. E and internal resistance r connected to a variable resistor R.

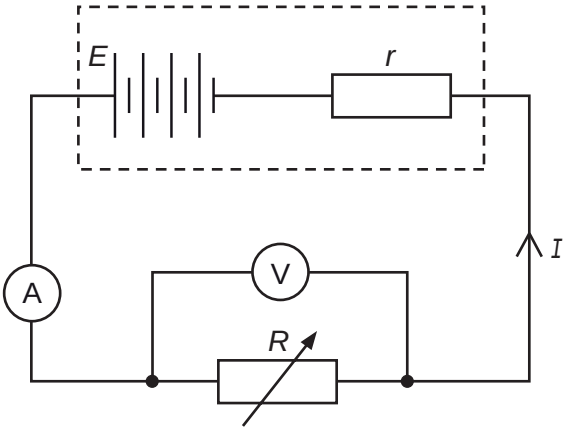

Fig. 5.1

The current I in the variable resistor is measured using an ammeter and the potential difference V across the variable resistor is measured using a voltmeter.

(a) Use Kirchhoff's second law to show that $V = E - Ir$.

[2]

(b) The resistance R of the variable resistor is varied. I and V are recorded for each value of R.

A graph of V (y-axis) against I (x-axis) is plotted.

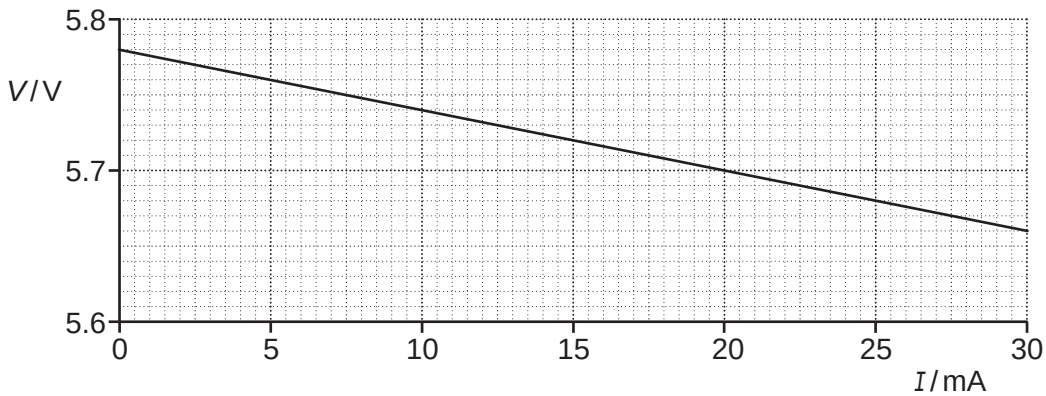

Fig. 5.2

© OCR 2021

Explain how values for *E* and *r* may be determined from the graph.
No calculations are required.

.....

.....

.....

..... **[2]**

(c) The resistance of the variable resistor is now fixed. The current is 25 mA.

(i) Use the graph to determine the resistance *R* of the variable resistor.

R = ... Ω **[1]**

(ii) Calculate the energy *W* dissipated in the variable resistor in 5.0 minutes.

W = ... J **[2]**

(iii) Calculate the charge *Q* passing through the variable resistor in 5.0 minutes. Include an appropriate unit.

Q = ... unit ..... **[2]**

© OCR 2021

6* The table shows some of the properties of a light dependent resistor (LDR).

	Resistance of LDR / Ω
Very bright	2.0×10^2
Daylight	2.0×10^3
Very dark	2.0×10^5

Design a circuit, using a potential divider with the LDR, so that the output potential difference from the circuit is

- greater than 5.0 V when the LDR is in very bright light
- less than 1.0 V when the LDR does not receive any light.

In your answer, include

- a circuit diagram with suggested component values
- an explanation of the operation of the circuit
- how the circuit could be adjusted to change the output potential difference for a different light intensity.

[6]

.....

.....

.....

.....

.....

.....

.....

.....

© OCR 2021

.....

.....

.....

.....

.....

.....

.....

Additional answer space if required

.....

.....

.....

.....

.....

.....

.....

.....

© OCR 2021

7 **(a)** A student investigates the potential difference across a light emitting diode (LED).
The student records the wavelength λ of the light emitted from the LED from a datasheet.
The student measures the minimum potential difference V across the LED when the LED first starts to emit light.
The student then repeats the experiment for LEDs with different values of λ. For each value of λ, the student measures V and determines the absolute uncertainty in V.

The student plots a graph of potential difference V (y-axis) against $1/\lambda$ (x-axis) including the error bars in V and a straight line of best fit.

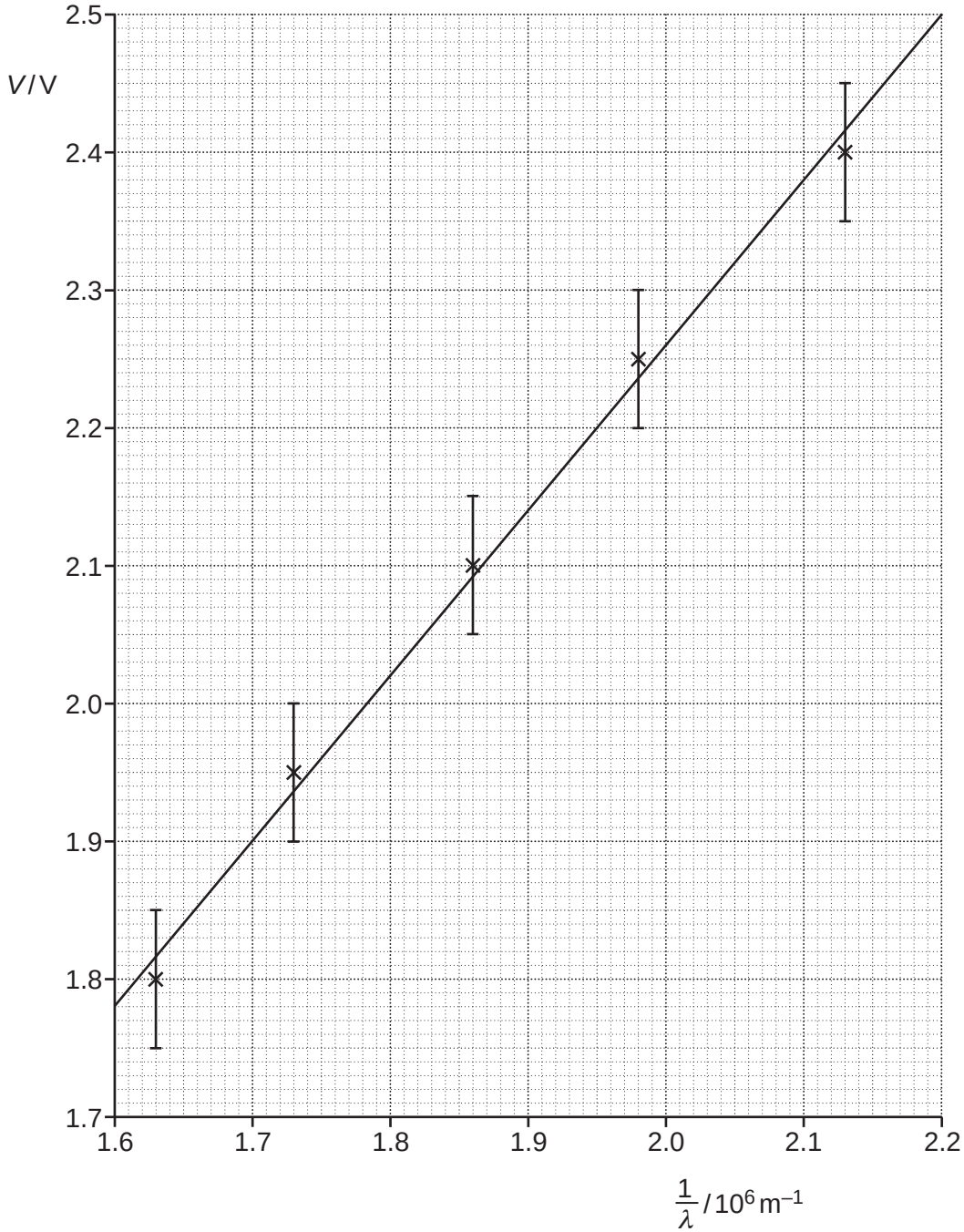

© OCR 2021

It is suggested that the relationship between V and λ is

$$V = \frac{hc}{e}\frac{1}{\lambda} + D$$

where h is the Planck constant, c is the speed of light in a vacuum, e is the elementary charge and D is a constant.

(i) Show that the gradient of the straight line of best fit is about 1.2×10^{-6} V m.

[2]

(ii) Use the gradient from **(i)** to determine a value for h.
Write your answer to **2** significant figures.

h = ... J s **[2]**

(iii) Draw a worst acceptable straight line. **[1]**

(iv) Use your worst acceptable straight line to determine the percentage uncertainty in your value for h.

percentage uncertainty = ... % **[3]**

© OCR 2021

(b) In a different experiment, photoelectrons are emitted from the surface of an aluminium plate when electromagnetic radiation of wavelength 98 nm falls on the plate.

The work function of aluminium is 4.1 eV.

(i) Calculate the maximum kinetic energy KE_{max} in joules (J) of the photoelectrons emitted from the surface of the aluminium.

KE_{max} = ... J **[3]**

(ii) The intensity of the electromagnetic radiation falling on the aluminium plate is now decreased without changing its wavelength.

State and explain the change, if any, to the maximum kinetic energy of the photoelectrons.

.....

.....

.....

..... **[2]**

END OF QUESTION PAPER

© OCR 2021

ADDITIONAL ANSWER SPACE

If additional space is required, you should use the following lined page(s). The question number(s) must be clearly shown in the margin(s).

© OCR 2021

© OCR 2021

© OCR 2021

OCR
Oxford Cambridge and RSA

Copyright Information

OCR is committed to seeking permission to reproduce all third-party content that it uses in its assessment materials. OCR has attempted to identify and contact all copyright holders whose work is used in this paper. To avoid the issue of disclosure of answer-related information to candidates, all copyright acknowledgements are reproduced in the OCR Copyright Acknowledgements Booklet. This is produced for each series of examinations and is freely available to download from our public website (www.ocr.org.uk) after the live examination series.

If OCR has unwittingly failed to correctly acknowledge or clear any third-party content in this assessment material, OCR will be happy to correct its mistake at the earliest possible opportunity.

For queries or further information please contact The OCR Copyright Team, The Triangle Building, Shaftesbury Road, Cambridge CB2 8EA.

OCR is part of the Cambridge Assessment Group; Cambridge Assessment is the brand name of University of Cambridge Local Examinations Syndicate (UCLES), which is itself a department of the University of Cambridge.

© OCR 2021